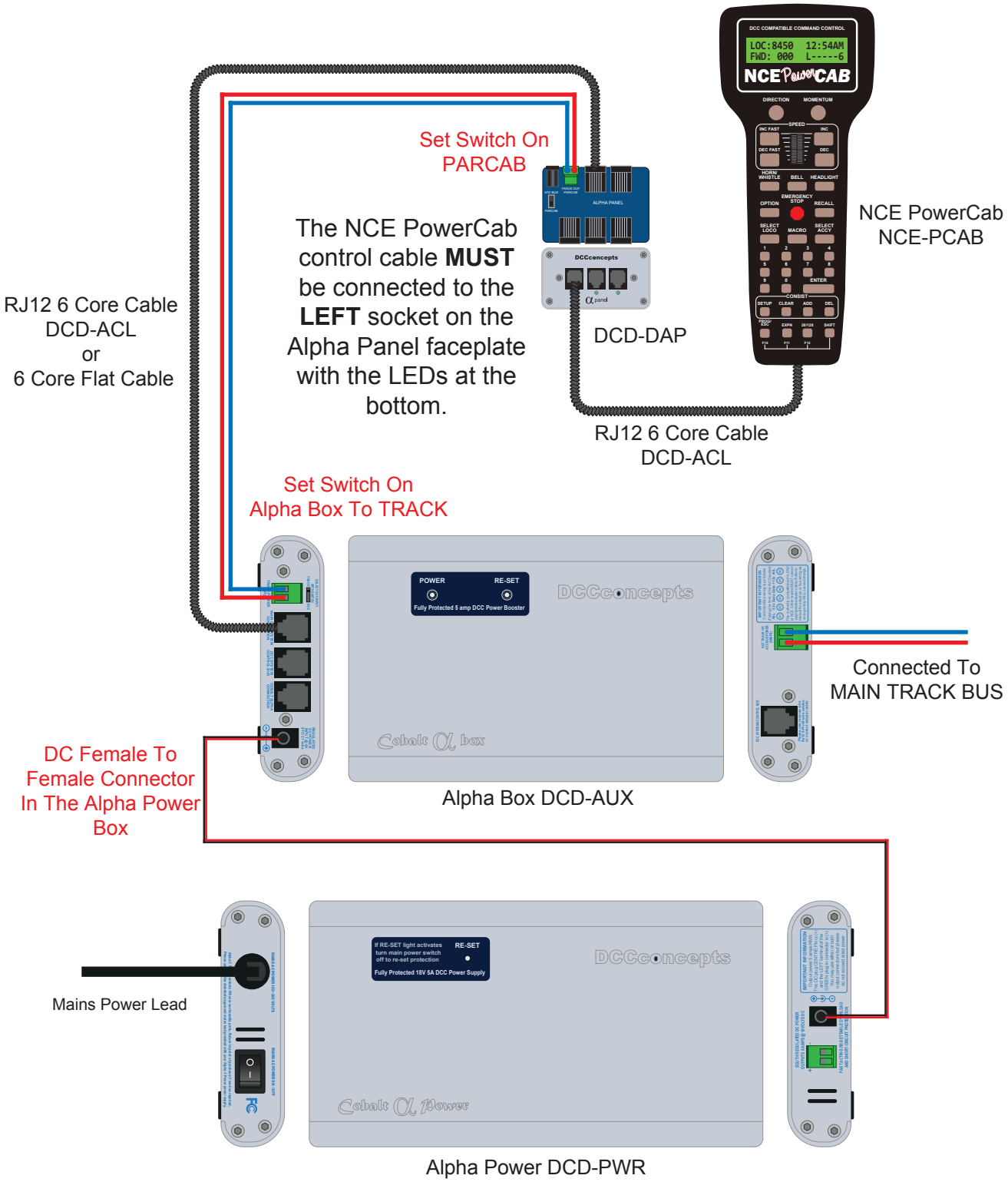Alpha Power & Alpha Box Basic Set Up With An NCE PowerCab & Alpha Panel