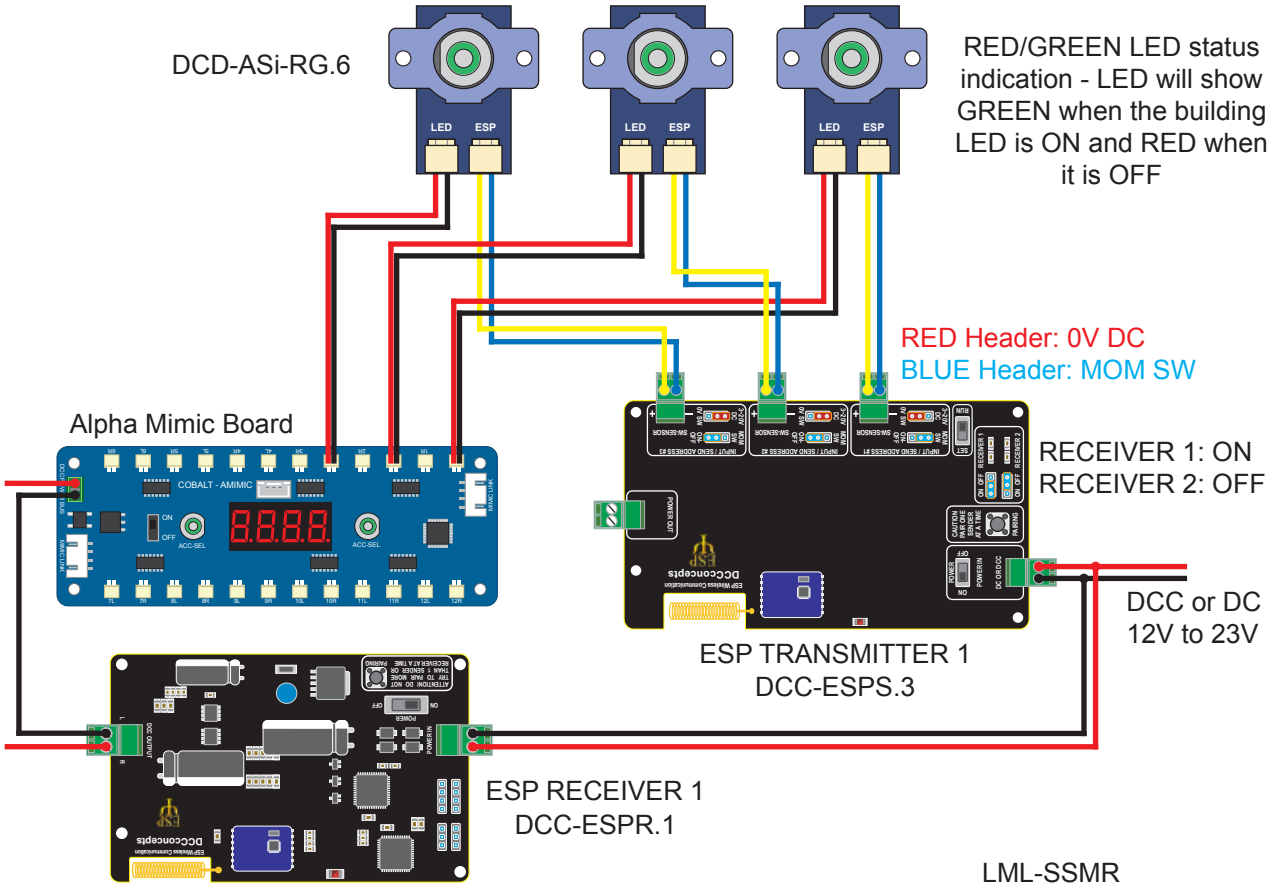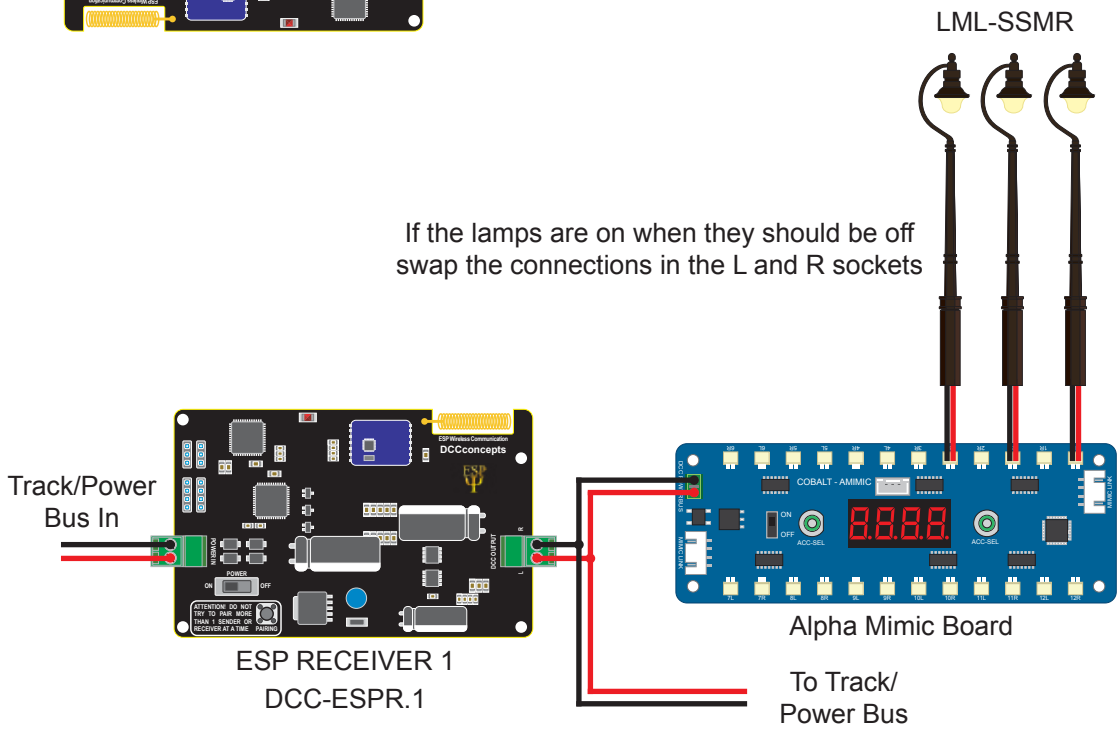Alpha Switch I On/Off Switch For Legacy Skyline Lighting Using ESP