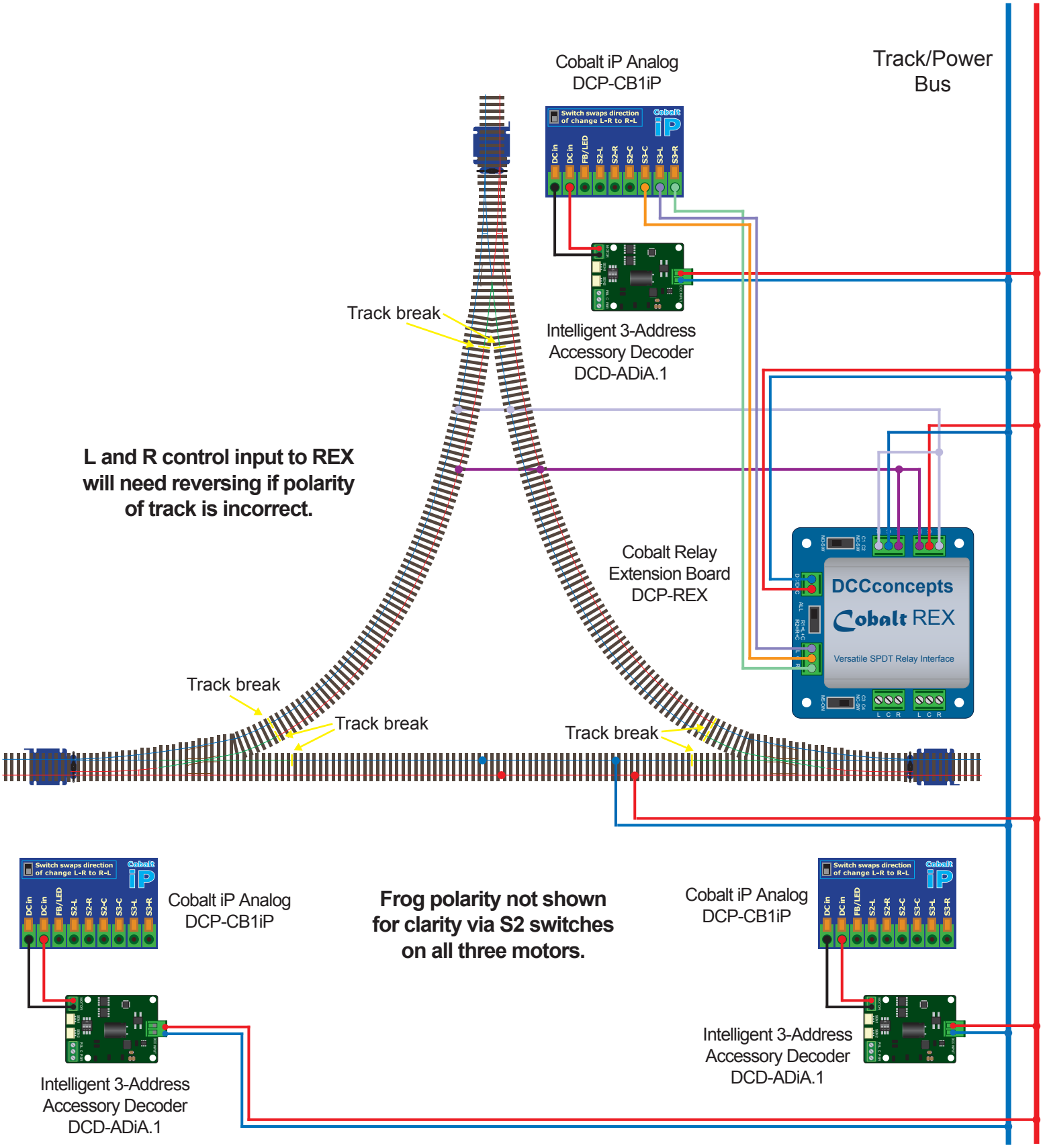Control Of A Triangle Junction Using Cobalt Analog, REX & ADiA Decoders